Faz pot 61x61x50

by Ramón Esteve

Vondom's Faz collection, designed by Ramón Esteve, is one of the firm's most iconic collections. It stands out for its modular design and sophistication, representing harmony, serenity and timelessness through mineral and emphatic shapes. Faz transforms environments with its unique combination of material and light, creating an enveloping and exclusive atmosphere.

Info

Description

Weight: 8 Kg

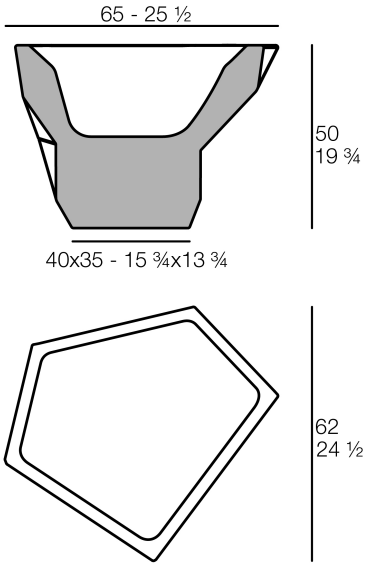

FAZ Jarron Pequeño	C = 28L
FAZ Smal Planter	C = 7 ½ gal

Finishes

finishes

Basic
Ref. 54400A

white 2001

black 2002

ecru 2003

tortora 2004

gray 2005

anthracite 2006

brown 2008

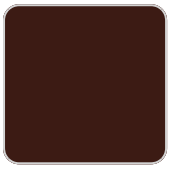
garnet 2015

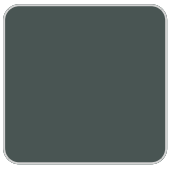
green 2016

cream 2017

blue 2018

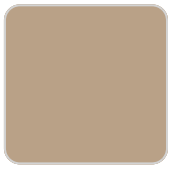
camel 2020

clay 2022

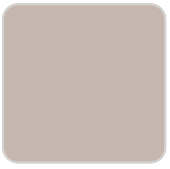
ecru granite

cream granite

ice 2101

Matt Polyethylene

Lacquered
Ref. 54400RF

VONDOM

white 3101 | black 3102 | ecru 3103 | tortora 3104 | gray 3105

anthracite 3106 | garnet 3113 | green 3116 | cream 3117 | blue 3118

camel 3120 | clay

Lacquered Polyethylene

lighting

Led – White
Ref. 54400W

ice 2101

White internally lit unit with LED technology. Available only in matte ice white finish.

LED RGBW – Cable
Ref. 54400L

ice 2101

Unit with internal lighting with RGBW LED technology and remote control unit for switching colors. Available only in matte ice white finish. Remote control included.

LED RGBW DMX – Cable
Ref. 54400D

ice 2101

Unit with internal lighting with RGBW LED technology and remote control unit for switching colors. Also controlLED by DMX-1024 (wireless), enabling communication between one or more products simultaneously via the DMX transmitter (not included). There are two options to choose from: Professional XLR DMX and Home WIFI DMX. (Remote control included).
Optional battery

LED RGBW – Battery
Ref. 54400Y

ice 2101

Unit with internal lighting with battery-powered RGBW LED technology. Includes charger and remote control for switching colors and charger. Available only in matte ice white finish.
LED RGBW DMX – Battery

Ref. 54400DY

ice 2101

Unit with internal lighting with RGBW LED technology and remote control unit for switching colors. Also controlLED by DMX-1024 (wireless), enabling communication between one or more products simultaneously via the DMX transmitter (not included). There are two options to choose from: Professional XLR DMX and Home WIFI DMX. (Remote control included).

VONDOM

Ambients