Vela table 200x100x72

by Ramón Esteve

The Vela collection, designed by Ramón Esteve for Vondom, offers a wide range of outdoor furniture and planters that combine the comfort and warmth of indoor furniture. With a design that balances proportions and geometric lines, Vela transforms any space into a cosy and elegant retreat.

Info

Description

Made of polyethylene resin by rotational moulding.100% Recyclable. Item suitable for indoor and outdoor use. Available in different finishes.

Weight: 82.85 Kg

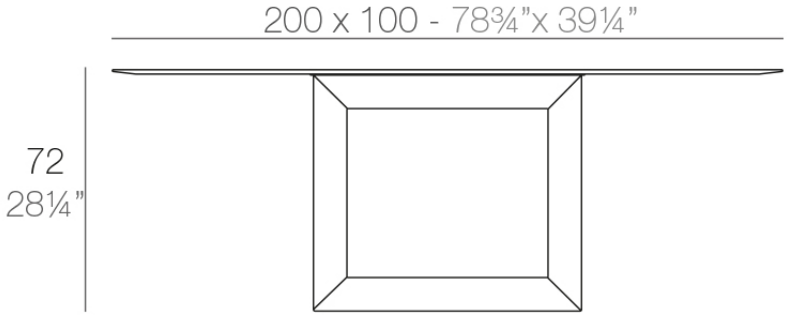

VELA Mesa
VELA Table

VONDOM

Finishes

finishes

Basic
Ref. 54050

white 2001

black 2002

ecru 2003

gray 2005

tortora 2004

anthracite 2006

red

brown 2008

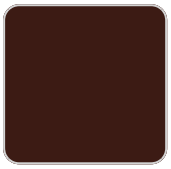
garnet 2015

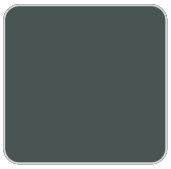
green 2016

cream 2017

blue 2018

ice 2101

khaki

beige

Matt Polyethylene

Lacquered
Ref. 54050F

white 3101

black 3102

ecru 3103

tortora 3104

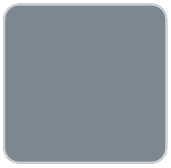
gray 3105

anthracite 3106 | garnet 3113 | green 3116 | cream 3117 | blue 3118

brown 3125

Lacquered Polyethylene

lighting

Led – White
Ref. 54050W

ice 2101

White internally lit unit with LED technology. Available only in matte ice white finish.

LED RGBW – Cable
Ref. 54050L

ice 2101

Unit with internal lighting with RGBW LED technology and remote control unit for switching colors. Available only in matte ice white finish. Remote control included.

LED RGBW DMX – Cable
Ref. 54050D

ice 2101

Unit with internal lighting with RGBW LED technology and remote control unit for switching colors. Also controlLED by DMX-1024 (wireless), enabling communication between one or more products simultaneously via the DMX transmitter (not included). There are two options to choose from: Professional XLR DMX and Home WIFI DMX. (Remote control included).
Optional battery

LED RGBW – Battery
Ref. 54050Y

ice 2101

Unit with internal lighting with battery-powered RGBW LED technology. Includes charger and remote control for switching colors and charger. Available only in matte ice white finish.

LED RGBW DMX – Battery
Ref. 54050DY

ice 2101

Unit with internal lighting with RGBW LED technology and remote control unit for

switching colors. Also controlLED by DMX-1024 (wireless), enabling communication between one or more products simultaneously via the DMX transmitter (not included). There are two options to choose from: Professional XLR DMX and Home WIFI DMX. (Remote control included).

tabletops

HPL Black Edge Top
Ref. VVAR02176

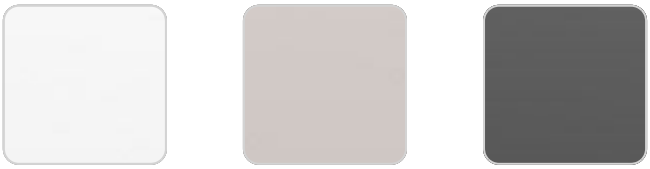

white(black edge) ecru(black edge) black(black edge)

HPL Solid Core Top
Ref. VVAR02176B

white (white edge) ecru tortora smoked cream

camel clay garnet brown green

ocean blue gray anthracite white stone

ecru stone

tortora stone

gray stone

black stone

oak1

oak2

walnut

Ambients