Alma planter

by A-cero

VONDOM

Info

Description

Pot made of polyethylene resin by rotational moulding. 100% Recyclable. Item suitable for indoor and outdoor use. Available in different finishes.

Weight: 17.87 Kg

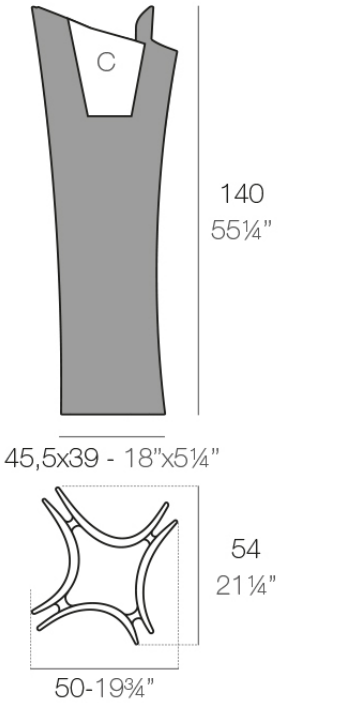

ALMA Maceta	C = 10 L
ALMA Planter	C = 2¾ gal

VONDOM

Finishes

finishes

Self-Watering
Ref. 53013R

Self-watering system included in all planters except those with basic finish

Lacquered
Ref. 53013F

VONDOM

Lacquered Polyethylene

lighting

Led – White
Ref. 53013W

White internally lit unit with LED technology. Available only in matte ice white finish.

LED RGBW – Cable
Ref. 53013L

ice 2101

Unit with internal lighting with RGBW LED technology and remote control unit for switching colors. Available only in matte ice white finish. Remote control included.

LED RGBW DMX – Cable
Ref. 53013D

ice 2101

Unit with internal lighting with RGBW LED technology and remote control unit for switching colors. Also controlLED by DMX-1024 (wireless), enabling communication between one or more products simultaneously via the DMX transmitter (not included). There are two options to choose from: Professional XLR DMX and Home WIFI DMX. (Remote control included).
Optional battery

LED RGBW – Battery
Ref. 53013Y

ice 2101

Unit with internal lighting with battery-powered RGBW LED technology. Includes charger and remote control for switching colors and charger. Available only in matte ice white finish.
LED RGBW DMX – Battery

Ref. 53013DY

ice 2101

Unit with internal lighting with RGBW LED technology and remote control unit for switching colors. Also controlLED by DMX-1024 (wireless), enabling communication between one or more products simultaneously via the DMX transmitter (not included). There are two options to choose from: Professional XLR DMX and Home WIFI DMX. (Remote control included).

VONDOM

Ambients