Sabinas sofa

by Javier Mariscal

Sabinas Collection of design furniture, by Javier Mariscal for Vondom, it's **inspired by natural fluid shapes**, avoiding any straight lines or geometry. Its outline hints at sand dunes, at female curves.

VONDOM

Info

Description

Made of polyethylene resin by rotational moulding. 100% Recyclable. Item suitable for indoor and outdoor use. Available in different finishes.

Weight: 40.02 Kg

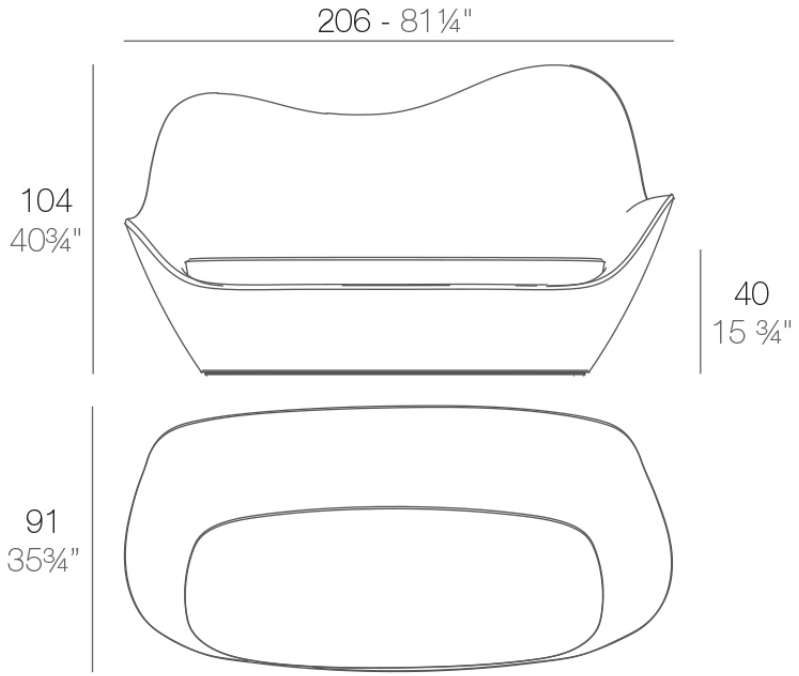

SABINAS Sofá
SABINAS Sofa

VONDOM

Finishes

finishes

Basic
Ref. 45009

Matt Polyethylene

Lacquered
Ref. 45009F

Lacquered Polyethylene

lighting

Led – White
Ref. 45009W

White internally lit unit with LED technology. Available only in matte ice white finish.

LED RGBW – Cable
Ref. 45009L

Unit with internal lighting with RGBW LED technology and remote control unit for switching colors. Available only in matte ice white finish. Remote control included.
LED RGBW DMX – Cable

Ref. 45009D

Unit with internal lighting with RGBW LED technology and remote control unit for switching colors. Also controlLED by DMX-1024 (wireless), enabling communication between one or more products simultaneously via the DMX transmitter (not included). There are two options to choose from: Professional XLR DMX and Home WIFI DMX. (Remote control included).
Optional battery

LED RGBW – Battery
Ref. 45009Y

Unit with internal lighting with battery-powered RGBW LED technology. Includes charger and remote control for switching colors and charger. Available only in matte ice white finish.

LED RGBW DMX – Battery
Ref. 45009DY

Unit with internal lighting with RGBW LED technology and remote control unit for switching colors. Also controlLED by DMX-1024 (wireless), enabling communication between one or more products simultaneously via the DMX transmitter (not included). There are two options to choose from: Professional XLR DMX and Home WIFI DMX. (Remote control included).

VONDOM

Ambients