Ulm sectional sofa right

by Ramón Esteve

Vondom's Ulm collection, designed by Ramón Esteve, is a new basic with a rationalist and universal character. This collection of modular outdoor furniture harmonises ergonomics, design and technology, based on basic volumes of cube, prism and sphere. Ulm transforms any outdoor space with its innovative and sophisticated design.

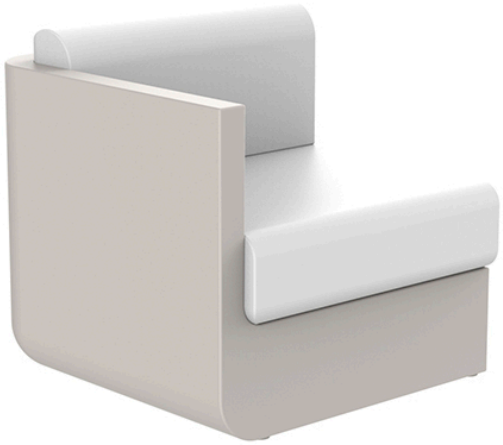

VONDOM

Info

Description

Made of polyethylene resin by rotational moulding. 100% Recyclable. Item suitable for indoor and outdoor use. Available in different finishes.

Weight: 25.15 Kg

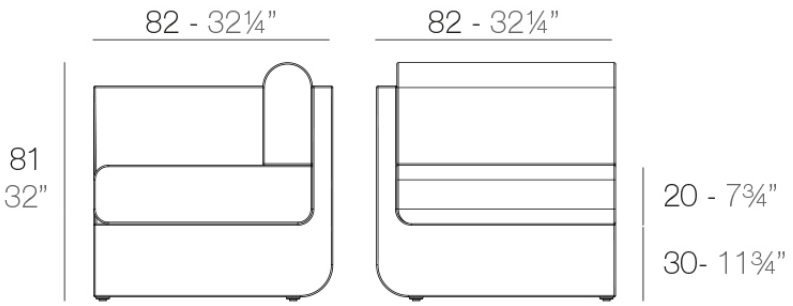

ULM Sofá Módulo Derecho
ULM Sectional Sofa Right

Combinations

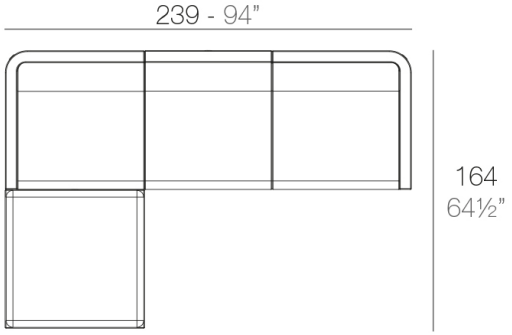

1 x 54171 Módulo Central - Sectional Sofa Armless
1 x 54173 Módulo Izquierdo - Sectional Sofa Left
1 x 54174 Módulo Derecho - Sectional Sofa Right
1 x 54133 Puff - Ottoman

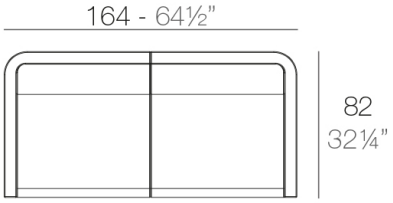

1 x 54173 Módulo Izquierdo - Sectional Sofa Left
1 x 54174 Módulo Derecho - Sectional Sofa Right

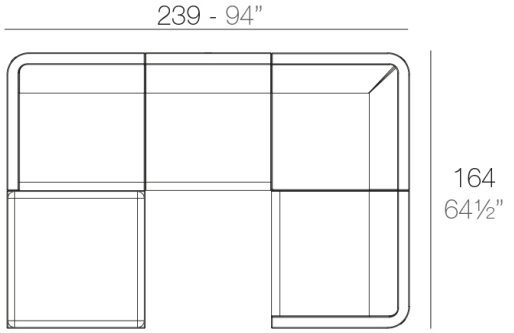

1 x 54171 Módulo Central - Sectional Sofa Armless
1 x 54173 Módulo Izquierdo - Sectional Sofa Left
1 x 54174 Módulo Derecho - Sectional Sofa Right
1 x 54133 Puff - Ottoman
1 x 54172 Módulo Esquina - Sectional Sofa Corner

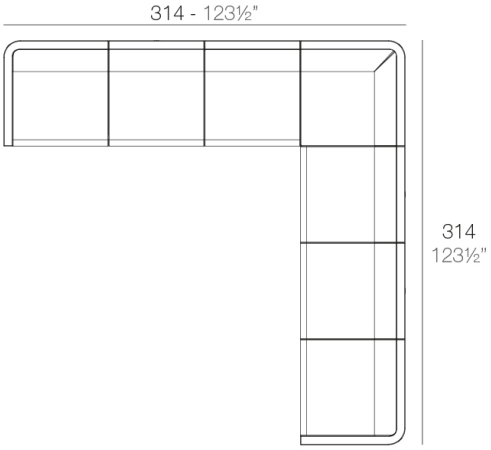

4 x 54171 Módulo Central - Sectional Sofa Armless
1 x 54173 Módulo Izquierdo - Sectional Sofa Left
1 x 54174 Módulo Derecho - Sectional Sofa Right
1 x 54172 Módulo Esquina - Sectional Sofa Corner

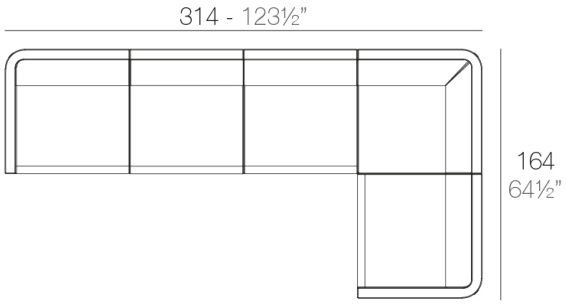

2 x 54171 Módulo Central - Sectional Sofa Armless
1 x 54173 Módulo Izquierdo - Sectional Sofa Left
1 x 54174 Módulo Derecho - Sectional Sofa Right
1 x 54172 Módulo Esquina - Sectional Sofa Corner

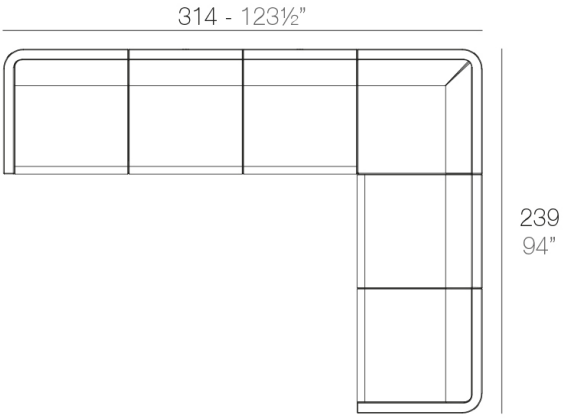

3 x 54171 Módulo Central - Sectional Sofa Armless
1 x 54173 Módulo Izquierdo - Sectional Sofa Left
1 x 54174 Módulo Derecho - Sectional Sofa Right
1 x 54172 Módulo Esquina - Sectional Sofa Corner

Finishes

finishes

Basic
Ref. 54174

Matt Polyethylene

Lacquered
Ref. 54174F

Lacquered Polyethylene

lighting

Led – White
Ref. 54174W

White internally lit unit with LED technology. Available only in matte ice white finish.

LED RGBW – Cable
Ref. 54174L

Unit with internal lighting with RGBW LED technology and remote control unit for switching colors. Available only in matte ice white finish. Remote control included.
LED RGBW DMX – Cable

Ref. 54174D

Unit with internal lighting with RGBW LED technology and remote control unit for switching colors. Also controlLED by DMX-1024 (wireless), enabling communication between one or more products simultaneously via the DMX transmitter (not included). There are two options to choose from: Professional XLR DMX and Home WIFI DMX. (Remote control included).
Optional battery

LED RGBW – Battery
Ref. 54174Y

Unit with internal lighting with battery-powered RGBW LED technology. Includes charger and remote control for switching colors and charger. Available only in matte ice white finish.

LED RGBW DMX – Battery
Ref. 54174DY

Unit with internal lighting with RGBW LED technology and remote control unit for switching colors. Also controlLED by DMX-1024 (wireless), enabling communication between one or more products simultaneously via the DMX transmitter (not included). There are two options to choose from: Professional XLR DMX and Home WIFI DMX. (Remote control included).

VONDOM

Ambients