Vases floor lamp ø38×70

by JM Ferrero

VASES Collection, is made up of flowerpots, furniture and lighting designed by the Valencian designer JM Ferrero. It’s shapes were inspired by diamond cutting, producing pieces of clear-cut shapes and great style, creating a big visual impact.

VONDOM

Info

Description

Made of polyethylene resin by rotational moulding.100% Recyclable. Item suitable for indoor and outdoor use. Available in different finishes.

Weight: 4.57 Kg

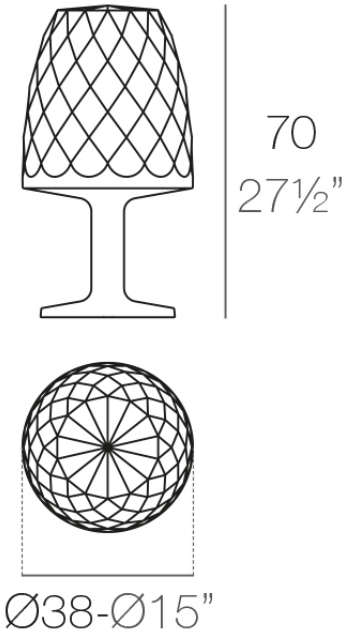

VASES Lámpara 70
VASES Lamp 70

Finishes

lighting

Led – White
Ref. 47038W

White internally lit unit with LED technology. Available only in matte ice white finish.

LED RGBW – Cable
Ref. 47038L

Unit with internal lighting with RGBW LED technology and remote control unit for switching colors. Available only in matte ice white finish. Remote control included.

LED RGBW DMX – Cable
Ref. 47038D

Unit with internal lighting with RGBW LED technology and remote control unit for switching colors. Also controlLED by DMX-1024 (wireless), enabling communication between one or more products simultaneously via the DMX transmitter (not included). There are two options to choose from: Professional XLR DMX and Home WIFI DMX. (Remote control included).
Optional battery

LED RGBW – Battery
Ref. 47038Y

Unit with internal lighting with battery-powered RGBW LED technology. Includes charger and remote control for switching colors and charger. Available only in matte ice white finish.

LED RGBW DMX – Battery
Ref. 47038DY

Unit with internal lighting with RGBW LED technology and remote control unit for switching colors. Also controlLED by DMX-1024 (wireless), enabling communication between one or more products simultaneously via the DMX transmitter (not included). There are two options to choose from: Professional XLR DMX and Home WIFI DMX. (Remote control included).

VONDOM

Ambients