Vela sectional sofa circular armless

by Ramón Esteve

The Vela collection, designed by Ramón Esteve for Vondom, offers a wide range of outdoor furniture and planters that combine the comfort and warmth of indoor furniture. With a design that balances proportions and geometric lines, Vela transforms any space into a cosy and elegant retreat.

Info

Description

Made of polyethylene resin by rotational moulding. 100% Recyclable. Item suitable for indoor and outdoor use. Available in different finishes.

Weight: 33.2 Kg

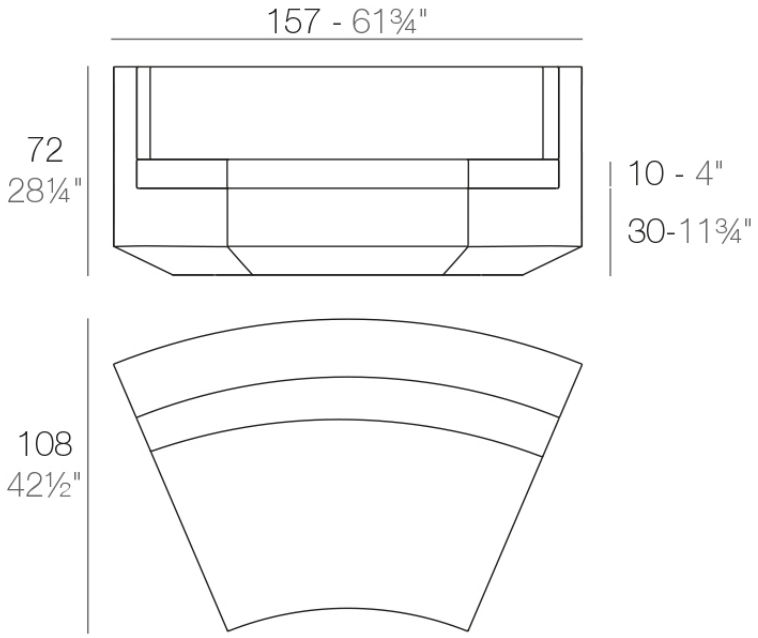

VELA Sofá Módulo Circular
VELA Curved Sectional Sofa

Combinations

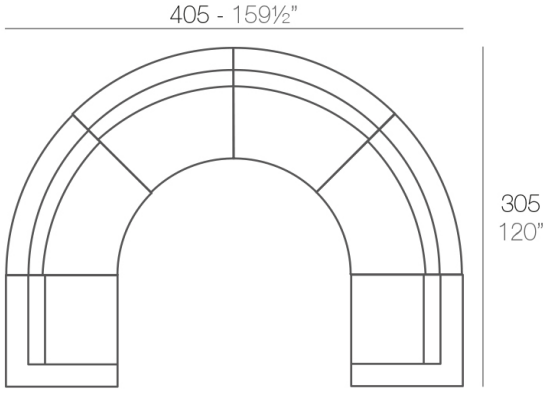

1 x 54077 Módulo Izquierdo - Sectional Sofa Left
4 x 54169 Módulo Circular - Curved Sectional Sofa
1 x 54078 Módulo Derecho - Sectional Sofa Right

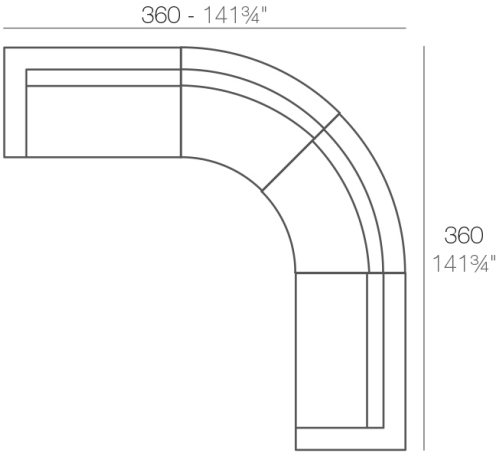

1 x 54024 Módulo Izquierdo XL - Sectional Sofa XL Left
2 x 54169 Módulo Circular - Curved Sectional Sofa
1 x 54025 Módulo Derecho XL - Sectional Sofa XL Right

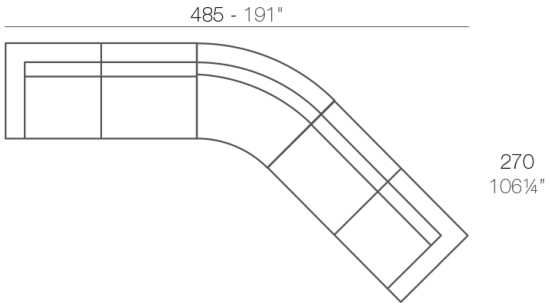

1 x 54077 Módulo Izquierdo - Sectional Sofa Left
2 x 54026 Módulo Central - Sectional Sofa Armless
1 x 54169 Módulo Circular - Curved Sectional Sofa
1 x 54078 Módulo Derecho - Sectional Sofa Right

VONDOM

Finishes

finishes

Basic
Ref. 54169

Matt Polyethylene

Lacquered
Ref. 54169F

Lacquered Polyethylene

lighting

Led – White
Ref. 54169W

White internally lit unit with LED technology. Available only in matte ice white finish.

LED RGBW – Cable
Ref. 54169L

Unit with internal lighting with RGBW LED technology and remote control unit for switching colors. Available only in matte ice white finish. Remote control included.
LED RGBW DMX – Cable

Ref. 54169D

Unit with internal lighting with RGBW LED technology and remote control unit for switching colors. Also controlLED by DMX-1024 (wireless), enabling communication between one or more products simultaneously via the DMX transmitter (not included). There are two options to choose from: Professional XLR DMX and Home WIFI DMX. (Remote control included).
Optional battery

LED RGBW – Battery
Ref. 54169Y

Unit with internal lighting with battery-powered RGBW LED technology. Includes charger and remote control for switching colors and charger. Available only in matte ice white finish.

LED RGBW DMX – Battery
Ref. 54169DY

Unit with internal lighting with RGBW LED technology and remote control unit for switching colors. Also controlLED by DMX-1024 (wireless), enabling communication between one or more products simultaneously via the DMX transmitter (not included). There are two options to choose from: Professional XLR DMX and Home WIFI DMX. (Remote control included).

Ambients