Vertex bar stool

by Karim Rashid

One of the latest great works by **KARIM RASHID**, we can find it in **VERTEX**, a family of ultra-contemporary sculpted outdoor & indoor designer furniture collection designed for the Spanish brand **VONDOM**.

Info

Description

Made of polyethylene resin by rotational moulding. 100% Recyclable. Item suitable for indoor and outdoor use. Available in different finishes.

Weight: 5.51 Kg

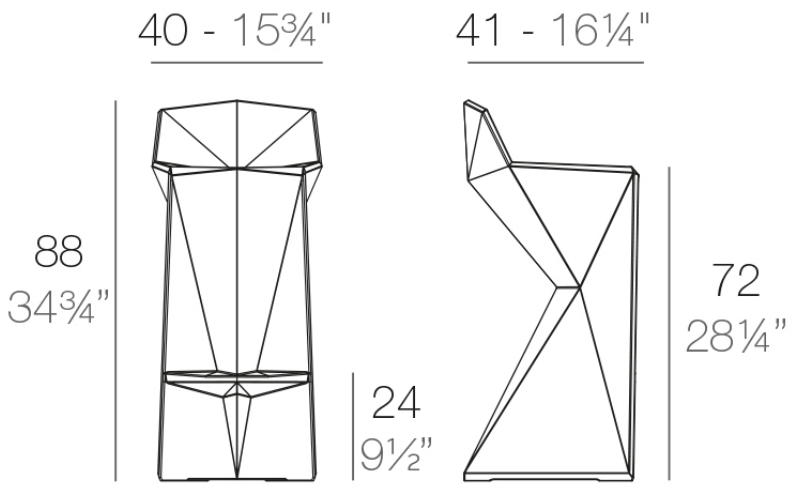

VERTEX Taburete Alto

VERTEX Bar Stool

VONDOM

Finishes

finishes

Basic
Ref. 51030

white 2001

black 2002

ecru 2003

tortora 2004

gray 2005

anthracite 2006

brown 2008

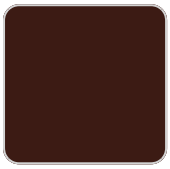
garnet 2015

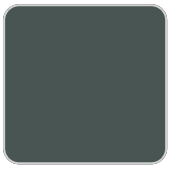
green 2016

cream 2017

blue 2018

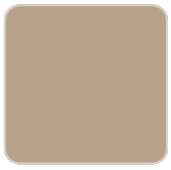
camel 2020

clay 2022

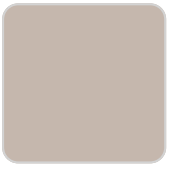
ecru granite

cream granite

ice 2101

Matt Polyethylene

Lacquered
Ref. 51030F

VONDOM

white 3101

black 3102

ecru 3103

tortora 3104

gray 3105

anthracite 3106

garnet 3113

green 3116

cream 3117

blue 3118

brown 3125

Lacquered Polyethylene

lighting

Led – White
Ref. 51030W

ice 2101

White internally lit unit with LED technology. Available only in matte ice white finish.

LED RGBW – Cable
Ref. 51030L

ice 2101

Unit with internal lighting with RGBW LED technology and remote control unit for switching colors. Available only in matte ice white finish. Remote control included.

LED RGBW DMX – Cable
Ref. 51030D

ice 2101

Unit with internal lighting with RGBW LED technology and remote control unit for switching colors. Also controlLED by DMX-1024 (wireless), enabling communication between one or more products simultaneously via the DMX transmitter (not included). There are two options to choose from: Professional XLR DMX and Home WIFI DMX. (Remote control included).
Optional battery

LED RGBW – Battery
Ref. 51030Y

ice 2101

Unit with internal lighting with battery-powered RGBW LED technology. Includes charger and remote control for switching colors and charger. Available only in matte ice white finish.
LED RGBW DMX – Battery

Ref. 51030DY

ice 2101

Unit with internal lighting with RGBW LED technology and remote control unit for switching colors. Also controlLED by DMX-1024 (wireless), enabling communication between one or more products simultaneously via the DMX transmitter (not included). There are two options to choose from: Professional XLR DMX and Home WIFI DMX. (Remote control included).

VONDOM

Ambients