Wing bar table 50x76x100

by A-cero

The outdoor furniture's Wing Collection by A-cero for Vondom, was born as a result of the folding of the straight and curve lines projection mixed in a dynamic way.

VONDOM

Info

Description

Made of polyethylene resin by rotational moulding. 100% Recyclable. Item suitable for indoor and outdoor use. Available in different finishes.

Weight: 12 Kg

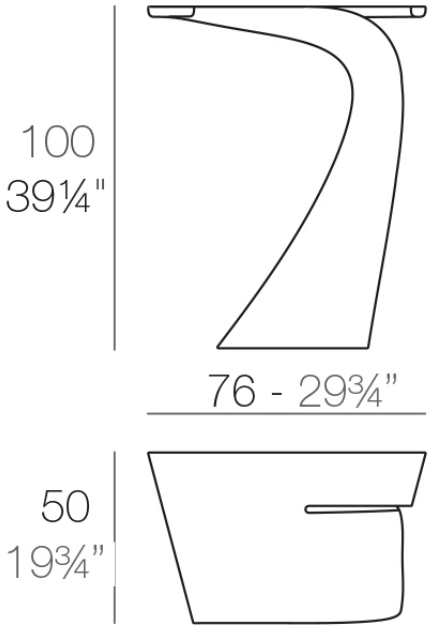

WING Mesa Alta
WING Bar Table

VONDOM

Finishes

finishes

Basic
Ref. 53032

white 2001

black 2002

ecru 2003

tortora 2004

gray 2005

anthracite 2006

brown 2008

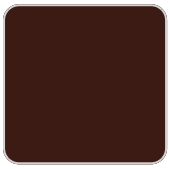
garnet 2015

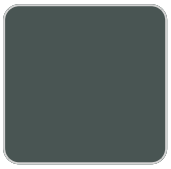
green 2016

cream 2017

blue 2018

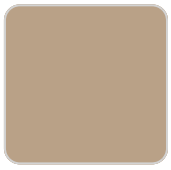
camel 2020

clay 2022

ice 2101

Matt Polyethylene

Lacquered
Ref. 53032F

white 3101

black 3102

ecru 3103

tortora 3104

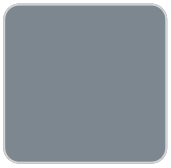
gray 3105

anthracite 3106 | garnet 3113 | green 3116 | cream 3117 | blue 3118

brown 3125

Lacquered Polyethylene

lighting

Led – White
Ref. 53032W

ice 2101

White internally lit unit with LED technology. Available only in matte ice white finish.

LED RGBW – Cable
Ref. 53032L

ice 2101

Unit with internal lighting with RGBW LED technology and remote control unit for switching colors. Available only in matte ice white finish. Remote control included.

LED RGBW DMX – Cable
Ref. 53032D

ice 2101

Unit with internal lighting with RGBW LED technology and remote control unit for switching colors. Also controlLED by DMX-1024 (wireless), enabling communication between one or more products simultaneously via the DMX transmitter (not included). There are two options to choose from: Professional XLR DMX and Home WIFI DMX. (Remote control included).
Optional battery

LED RGBW – Battery
Ref. 53032Y

ice 2101

Unit with internal lighting with battery-powered RGBW LED technology. Includes charger and remote control for switching colors and charger. Available only in matte ice white finish.

LED RGBW DMX – Battery
Ref. 53032DY

ice 2101

Unit with internal lighting with RGBW LED technology and remote control unit for

switching colors. Also controlLED by DMX-1024 (wireless), enabling communication between one or more products simultaneously via the DMX transmitter (not included). There are two options to choose from: Professional XLR DMX and Home WIFI DMX. (Remote control included).

VONDOM

Ambients