Wing chair

by A-cero

The outdoor furniture's Wing Collection by A-cero for Vondom, was born as a result of the folding of the straight and curve lines projection mixed in a dynamic way.

VONDOM

Info

Description

Made of polyethylene resin by rotational moulding. 100% Recyclable. Item suitable for indoor and outdoor use. Available in different finishes.

Weight: 9 Kg

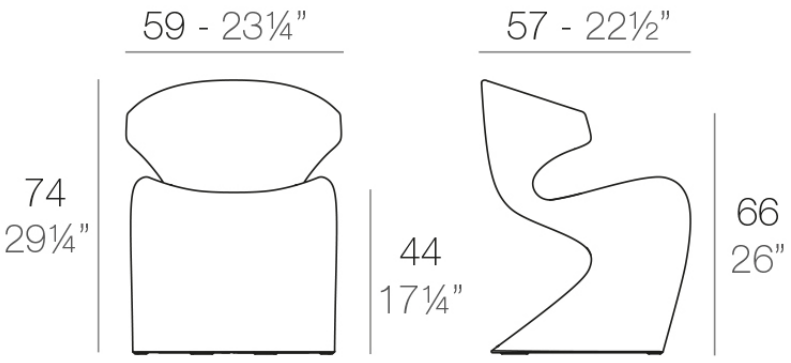

WING Silla
WING Chair

VONDOM

Finishes

finishes

Basic
Ref. 53034

white 2001

black 2002

ecru 2003

tortora 2004

gray 2005

anthracite 2006

brown 2008

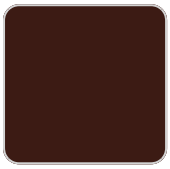
garnet 2015

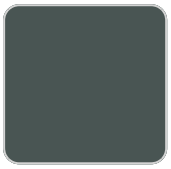
green 2016

cream 2017

blue 2018

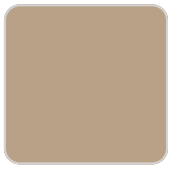
camel 2020

clay 2022

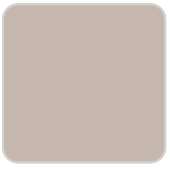
ecru granite

cream granite

ice 2101

Matt Polyethylene

Lacquered
Ref. 53034F

VONDOM

Lacquered Polyethylene

lighting

Led – White
Ref. 53034W

White internally lit unit with LED technology. Available only in matte ice white finish.

LED RGBW – Cable
Ref. 53034L

ice 2101

Unit with internal lighting with RGBW LED technology and remote control unit for switching colors. Available only in matte ice white finish. Remote control included.

LED RGBW DMX – Cable
Ref. 53034D

ice 2101

Unit with internal lighting with RGBW LED technology and remote control unit for switching colors. Also controlLED by DMX-1024 (wireless), enabling communication between one or more products simultaneously via the DMX transmitter (not included). There are two options to choose from: Professional XLR DMX and Home WIFI DMX. (Remote control included).
Optional battery

LED RGBW – Battery
Ref. 53034Y

ice 2101

Unit with internal lighting with battery-powered RGBW LED technology. Includes charger and remote control for switching colors and charger. Available only in matte ice white finish.
LED RGBW DMX – Battery

Ref. 53034DY

ice 2101

Unit with internal lighting with RGBW LED technology and remote control unit for switching colors. Also controlLED by DMX-1024 (wireless), enabling communication between one or more products simultaneously via the DMX transmitter (not included). There are two options to choose from: Professional XLR DMX and Home WIFI DMX. (Remote control included).

fabric

BAIONA
Ref. 53034CO

garnet 10107 baiona

black 10114 baiona

clay 10106 baiona

gray 10113 baiona

camel 10104 baiona

blue 10112 baiona

cream 10103 baiona

ocean 10111 baiona

tortora 10102 baiona

green 10110 baiona

ecru 10101 baiona

jade 10109 baiona

white 10100 baiona

brown 10108 baiona

Group 1C. High density 100% acrylic fabric, which provides a solid feel. It has an irregular pattern that adds a handcrafted touch.
CALELLA
Ref. 53034CO

gray 10128 calella

white 10120 calella

blue 10127 calella

jade 10126 calella

clay 10125 calella

mustard 10124 calella

cream 10123 calella

tortora 10122 calella

anthracite 10129 calella

ecru 10121 calella

Group 1C. PFAS-free 100% acrylic fabric with a rich and unusual texture and an exceptional sofness, which enhances the comfort of the furniture.

FISTERRA
Ref. 53034CO

cream 10132 fisterra

white 10130 fisterra

ecru 10131 fisterra

tortora 10135 fisterra

camel 10134 fisterra

peach 10146 fisterra

clay 10137 fisterra

brown 10136 fisterra

olive 10145 fisterra

jade 10139 fisterra

green 10140 fisterra

ocean 10141 fisterra

blue 10142 fisterra

gray 10143 fisterra

anthracite 10144 fisterra

black 10147 fisterra

Group 1C. 100% acrylic fabric, with a distintive irregular marbled pattern and a soft feel.

PORTONOVO
Ref. 53034CO

anthracite 10164 portonovo

clay 10156 portonovo

gray 10163 portonovo

mustard 10155 portonovo

blue 10162 portonovo

camel 10154 portonovo

cream 10153 portonovo

ocean 10161 portonovo

tortora 10152 portonovo

green 10160 portonovo

ecru 10151 portonovo

jade 10159 portonovo

brown 10158 portonovo

white 10150 portonovo

black 10165 portonovo

garnet 10157 portonovo

Group 1A. 100% acrylic fabric, with a flat and simple design, which adapts to any decorative style.

ALTEA
Ref. 53034CO

VONDOM

tortora 1102 altea

white 1100 altea

camel 1120 altea

clay 1122 altea

garnet 1106 altea

brown 1104 altea

jade 1125 altea

ocean 1123 altea

gray 1101 altea

anthracite 1124 altea

black 1105 altea

Group 1A. Soft outdoor fabric with leather-like texture.

AROUSA
Ref. 53034CO

tortora 1209 arousa

camel 1230 arousa

clay 1231 arousa

brown 1214 arousa

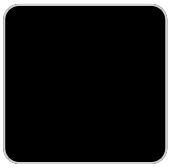
jade 1235 arousa

gray 1208 arousa

anthracite 1210 arousa

Group 1B. Soft outdoor fabric with shiny finish.

VONDOM

Ambients