Frame sofa corner 90º

by Ramón Esteve

Frame, outdoor collection by Ramon Esteve, comes from generating serene and timeless shapes using the framework as elementary geometry. The endless possibilities offered by the material using advanced technology, was the motivation to explore the limits.

Info

Description

Made of polyethylene resin by rotational moulding. 100% Recyclable. Item suitable for indoor and outdoor use. Available in different finishes.

Weight: 35.41 Kg

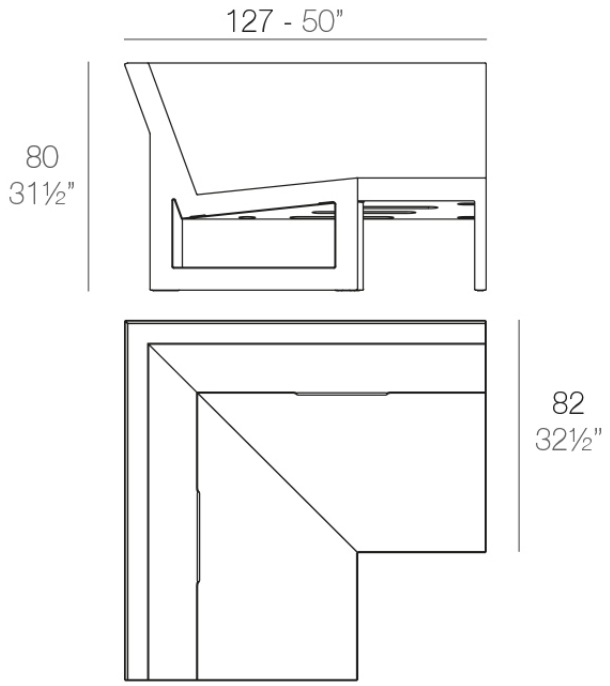

FRAME Sofá Módulo Esquina 90º
FRAME Sectional Sofa Corner 90º

Combinations

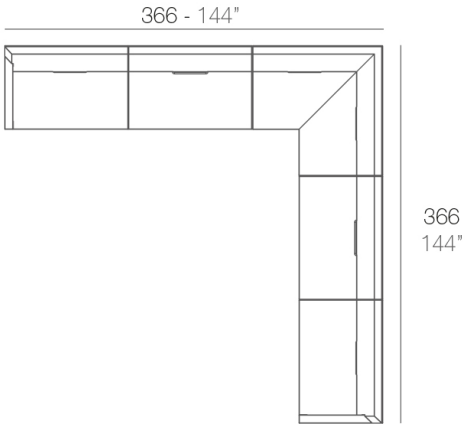

2 x 54120 Sofá Módulo Central - Sectional Sofa Armless
1 x 54121 Sofá Módulo Esquina - Sectional Sofa Corner
1 x 54119 Sofá Módulo Izquierdo - Sectional Sofa Left
1 x 54118 Sofá Módulo Derecho - Sectional Sofa Right

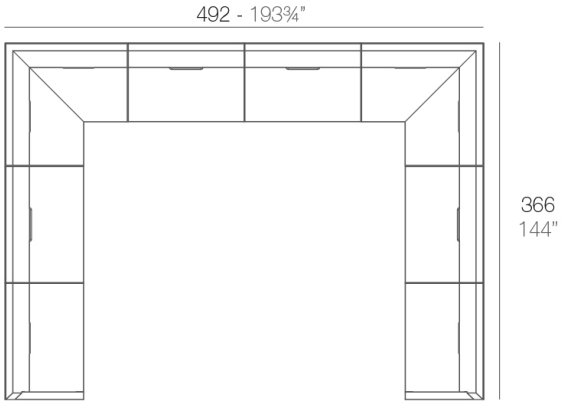

4 x 54120 Sofá Módulo Central - Sectional Sofa Armless
2 x 54121 Sofá Módulo Esquina - Sectional Sofa Corner
1 x 54119 Sofá Módulo Izquierdo - Sectional Sofa Left
1 x 54118 Sofá Módulo Derecho - Sectional Sofa Right

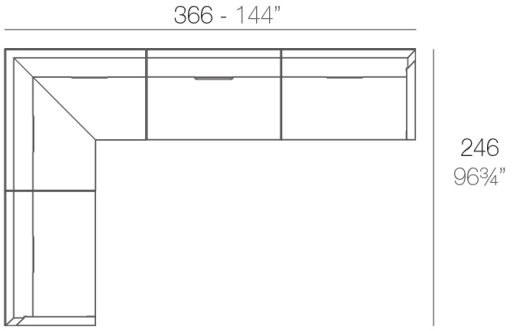

1 x 54120 Sofá Módulo Central - Sectional Sofa Armless
1 x 54121 Sofá Módulo Esquina - Sectional Sofa Corner
1 x 54119 Sofá Módulo Izquierdo - Sectional Sofa Left
1 x 54118 Sofá Módulo Derecho - Sectional Sofa Right

VONDOM

Finishes

finishes

Basic
Ref. 54121

white 2001

black 2002

ecru 2003

tortora 2004

gray 2005

anthracite 2006

brown 2008

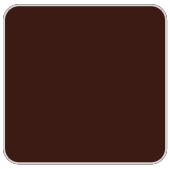
garnet 2015

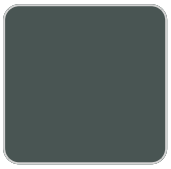
green 2016

cream 2017

blue 2018

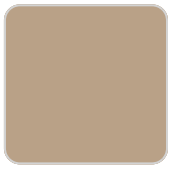
camel 2020

clay 2022

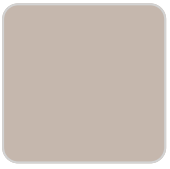
ecru granite

cream granite

ice 2101

Matt Polyethylene

Lacquered
Ref. 54121F

VONDOM

white 3101

black 3102

ecru 3103

tortora 3104

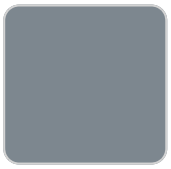
gray 3105

anthracite 3106

brown 3125

Lacquered Polyethylene

fabric

BAIONA
Ref. 54121CO

clay 10106 baiona

blue 10112 baiona

cream 10103 baiona

black 10114 baiona

ocean 10111 baiona

tortora 10102 baiona

gray 10113 baiona

camel 10104 baiona

green 10110 baiona

ecru 10101 baiona

white 10100 baiona

jade 10109 baiona

brown 10108 baiona

garnet 10107 baiona

Group 1C. High density 100% acrylic fabric, which provides a solid feel. It has an irregular pattern that adds a handcrafted touch.

VONDOM

CALELLA
Ref. 54121CO

blue 10127 calella

clay 10125 calella

jade 10126 calella

mustard 10124 calella

cream 10123 calella

tortora 10122 calella

anthracite 10129 calella

ecru 10121 calella

gray 10128 calella

white 10120 calella

Group 1C. PFAS-free 100% acrylic fabric with a rich and unusual texture and an exceptional sofness, which enhances the comfort of the furniture.

FISTERRA
Ref. 54121CO

cream 10132 fisterra

white 10130 fisterra

ecru 10131 fisterra

tortora 10135 fisterra

camel 10134 fisterra

peach 10146 fisterra

clay 10137 fisterra

brown 10136 fisterra

olive 10145 fisterra

jade 10139 fisterra

green 10140 fisterra

ocean 10141 fisterra

blue 10142 fisterra

gray 10143 fisterra

anthracite 10144 fisterra

black 10147 fisterra

Group 1C. 100% acrylic fabric, with a distintive irregular marbled pattern and a soft feel.

PORTONOVO
Ref. 54121CO

cream 10153 portonovo

gray 10163 portonovo

mustard 10155 portonovo

ocean 10161 portonovo

blue 10162 portonovo

camel 10154 portonovo

green 10160 portonovo

tortora 10152 portonovo

jade 10159 portonovo

ecru 10151 portonovo

brown 10158 portonovo

white 10150 portonovo

black 10165 portonovo

garnet 10157 portonovo

anthracite 10164 portonovo

clay 10156 portonovo

Group 1A. 100% acrylic fabric, with a flat and simple design, which adapts to any decorative style.

VONDOM

ALTEA
Ref. 54121CO

tortora 1102 altea

white 1100 altea

camel 1120 altea

clay 1122 altea

garnet 1106 altea

brown 1104 altea

jade 1125 altea

ocean 1123 altea

gray 1101 altea

anthracite 1124 altea

black 1105 altea

Group 1A. Soft outdoor fabric with leather-like texture.

AROUSA
Ref. 54121CO

tortora 1209 arousa

camel 1230 arousa

clay 1231 arousa

brown 1214 arousa

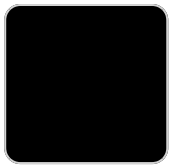
jade 1235 arousa

gray 1208 arousa

anthracite 1210 arousa

Group 1B. Soft outdoor fabric with shiny finish.

VONDOM

Ambients