FRITZ HANSEN

PLURALIS™

PRODUCT FACT SHEET

PLURALIS™

As inferred by its name, the Pluralis™ table by Kasper Salto offers a myriad of possibilities. Characterised by its understated design, elegance and uncompromising quality, it brings a whole new level of functionality to the workspace. Transforming from a single desk to workstations or a meeting table, it can be configured in endless ways. Bespoke cable management and power solutions ensure productivity.

PRODUCT TYPE
Table

ENVIRONMENT
Indoor

DESIGNER / YEAR OF DESIGN
Kasper Salto, 2016/2023

ABOUT THE DESIGNER
Kasper Salto (b. 1967) is the designer behind Fritz Hansen's Pluralis™, Little Friend™ and NAP™ chair series. His design of furniture has sold to prominent places, such as The National Art Center, Tokyo, Louisiana art museum, Denmark. In 2004 he founded the design company Salto & Sigsgaard with Architect Thomas Sigsgaard, working mainly in the field of product design, lighting – and interior.

MODELS
KS430
KS431
KS432
KS433
KS434
KS434A
KS435
Ks436
KS437
KS438
KS439

MATERIAL
Tabletop: The table comes in 6 standard sizes, and can be customized in special sizes. The tabletops are made of chipboard core and matching ABS or veneer edge band. The tabletop comes with a surface in: Linoleum, laminate or veneer.

Base: The legs of the base are positioned and shaped in such a way that the user will always be met with a soft circle creating an invitation to come closer and use the table. The base is crafted in die casted aluminium and the rails are extruded aluminium. It is available in with a polished or powder coated finish. The base is mounted with glides.

Materials in %:
KS430: Particleboard: 43%, Aluminium: 54%, Steel: 2%
KS431: Particleboard: 63%, Aluminum: 32%, Steel 5%
KS432: Particleboard: 53%, Aluminium: 45%, Steel: 2%
KS433: Particleboard: 58%, Aluminum: 40%, Steel, 2%
KS434: Particleboard: 56%, Aluminium: 42%, Steel: 2%
KS435: Particleboard: 58%, Aluminium: 41%, Steel: 2%
KS436: Particleboard: 64%, Aluminium: 34%, Steel: 1%
KS437: Particleboard: 58%, Aluminum: 35%, Steel: 7%
KS438: Particleboard: 58%, Aluminum: 37%, Steel: 5%
KS439: Particleboard: 63%, Aluminum: 32%, Steel: 5%

FEATURES
Overhang:
- Available at one or both ends (+25 cm / 9.8 in). The overhang is a seamless extension of the table – i.e. a full length tabletop that allows for an extra seat at the end of the table.

Cable management:

Cut out w. matt aluminium cable cover (circular)

Cut out w. matt aluminium cable cover (rectangular)

Cable tray in black powder coated steel

Cable hose in black or silver

Custom cut out:

Top frame with power solution that seamlessly matches the tabletop with a lid that silently opens at the touch of a finger*. Flexible placement of top frame.

Power frame in stainless steel with a standard four-module power strip. Flexible placement of power frame.

*Power solution only available in: EU, GB, CH, KR, JP & CN.

VARIANTS
The tabletop is available in 5 variants:

OAK	WALNUT	WHITE	LAVA GREY	MUAVE BROWN
Veneer	Veneer	Laminate	Laminate	Linoleum

The base is available in 4 variants:

POLISHED	BROWN BRONZE	BLACK

MADE-TO-ORDER
Non-standard configurations (special colours etc.) are available upon request at a minimum order quantity.

CERTIFICATION
- FSC™ FSC-C120451: The wood used for Pluralis™ is FSC-certified (FSC MIX). The FSC-certification ensures the wood is from responsible and environmentally managed forests that preserve the natural surroundings and support the local community.

For more information about environment and manufacturing processes, please download our environmental information sheet at: **fritzhansen.com**

TEST
EN 15372:2023, L2

WEIGHT
Selected examples:
- KS430: 41 kg / 90 lb
- KS432: 52 kg / 115 lb
- KS434: 59 kg / 130 lb
- KS435: 91 kg / 200 lb
- KS436: 123 kg / 271 lb
- KS431: 43 kg /95 lb
- KS433: 57 kg / 126 lb
- KS437: 31 kg / 69 lb
- KS438: 62 kg / 137 lb
- KS439: 115 kg /254 lb

COUNTRY OF ORIGIN
Poland

PRE-ASSEMBLED
No

PACKAGING
The tabletop is packed in a cardboard box with foam protection. Legs are packed in plastic bag and shipped in a cardboard box. Rails (set of two) are packed in cardboard box. All packaging material can be recycled.

CLEANING AND CARE
Find recommendations for cleaning and care at:
fritzhansen.com/maintenance

REPAIR, DISPOSAL AND REUSE
In case of repair and disposal the table can be disassembled into parts. The steel and wood parts can be recycled. Check local regulations for recycling options and whether there is potential for reuse.

WARRANTY
Fritz Hansen provides a five-year warranty on standard products against defects in materials and workmanship. An extended warranty of up to twenty years is provided on selected products provided they have been registered online on **fritzhansen.com/my-fh**.

Standard: 5 years (Lacquer on base, Surface on tabletop)

Extended: 10 years (Base, Tabletop)

On any material, fabric or leather, which is not listed in our price list on a specific product, the standard warranty is 2 years.

Additional warranty conditions can be found at:
fritzhansen.com/warranty

SPARE PARTS
A range of spare parts can be found on:
fritzhansen.com/en/Categories/Products/Spareparts

DIMENSIONS
Please go to page 4.

DIMENSIONS

KS430

TABLETOPS: 1
WEIGHT: 41 KG / 90 LB (DEPENDING ON CONFIGURATION)

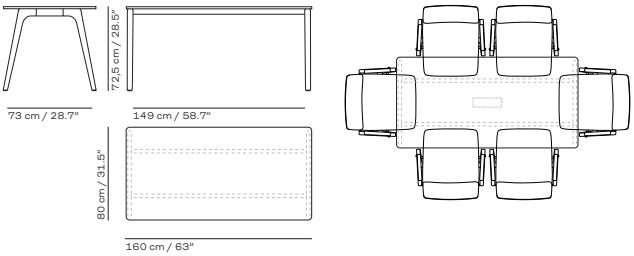

KS431

TABLETOPS: 1
WEIGHT: 52 KG / 115 LB (DEPENDING ON CONFIGURATION)

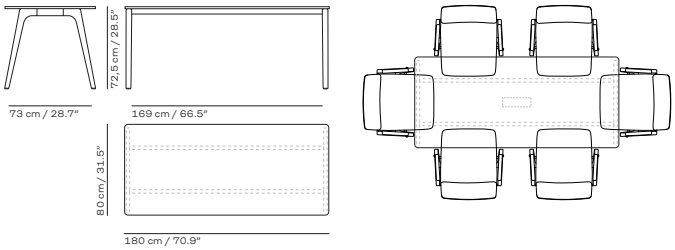

KS432

TABLETOPS: 1
WEIGHT: 52 KG / 115 LB (DEPENDING ON CONFIGURATION)

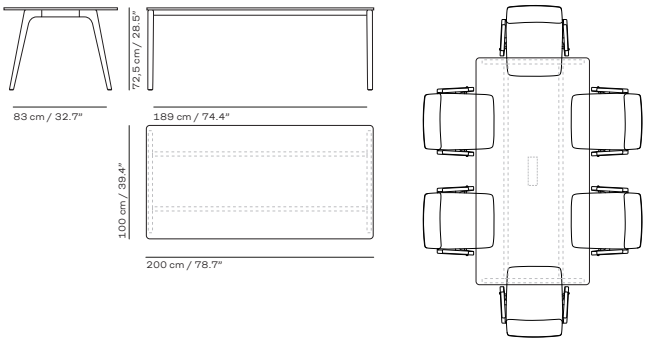

KS433

TABLETOPS: 1
WEIGHT: 52 KG / 115 LB (DEPENDING ON CONFIGURATION)

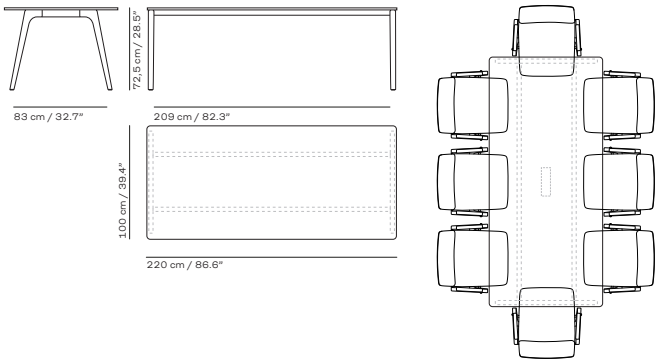

KS434

TABLETOPS: 1
WEIGHT: 59 KG / 130 LB (DEPENDING ON CONFIGURATION)

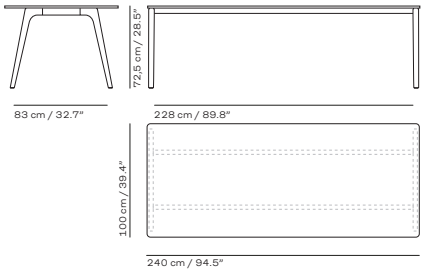

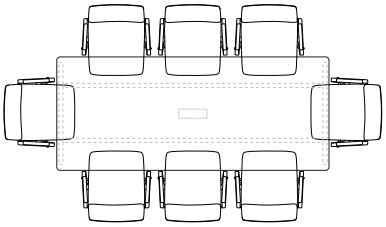

KS434A

TABLETOPS: 1
WEIGHT: 91 KG / 200 LB (DEPENDING ON CONFIGURATION)

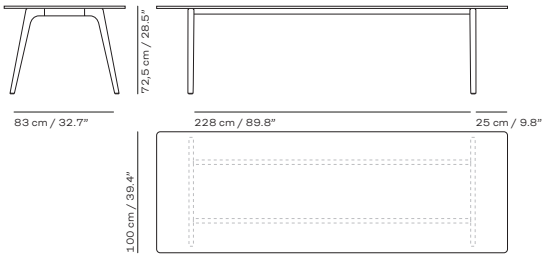

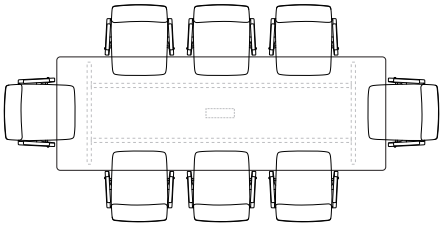

DIMENSIONS

KS435

TABLETOPS: 2
WEIGHT: 91 KG / 200 LB (DEPENDING ON CONFIGURATION)

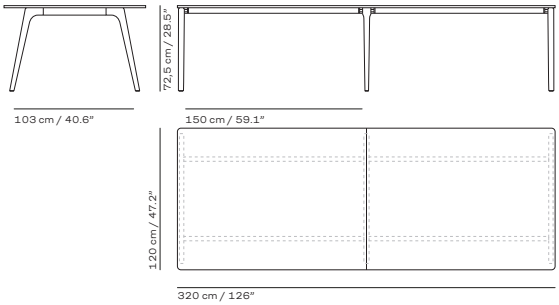

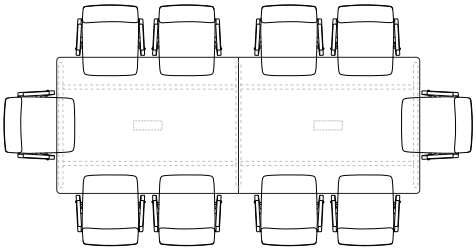

KS436

TABLETOPS: 2
WEIGHT: 123 KG / 271 LB (DEPENDING ON CONFIGURATION)

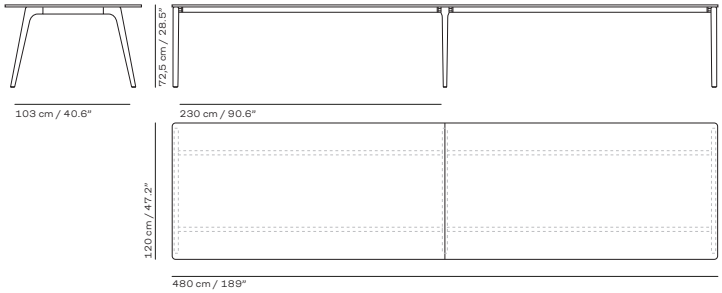

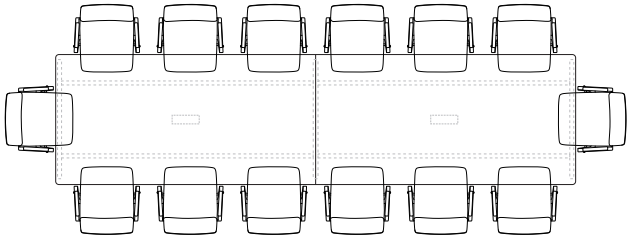

KS437

TABLETOPS: 1
WEIGHT: 59 KG / 130 LB (DEPENDING ON CONFIGURATION)

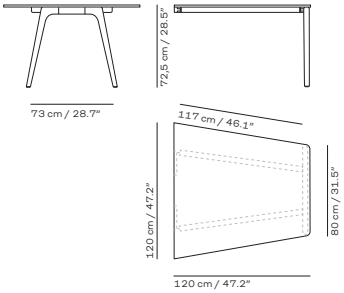

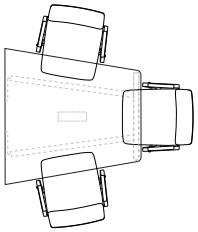

KS438

TABLETOPS: 1
WEIGHT: 91 KG / 200 LB (DEPENDING ON CONFIGURATION)

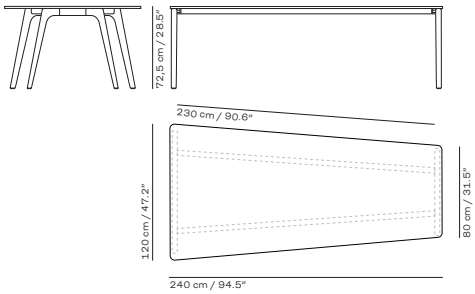

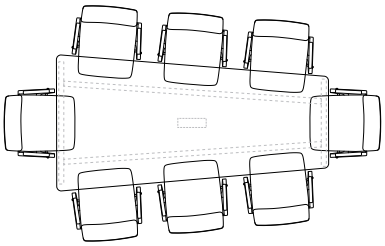

DIMENSIONS

KS439
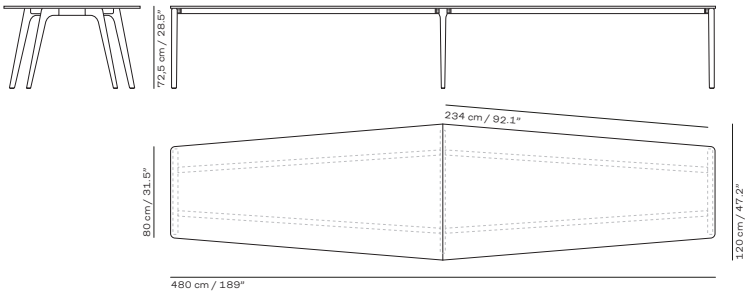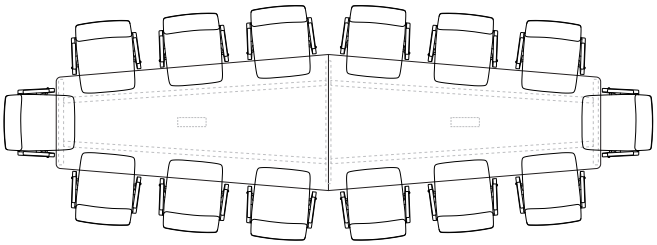
TABLETOPS: 2
WEIGHT: 52 KG / 115 LB (DEPENDING ON CONFIGURATION)