PASTOE

Armchair for Metz&Co

GERRIT RIETVELD

The Armchair for Metz & Co was designed by Gerrit Rietveld in 1942 for the Amsterdam department store of the same name. Because Rietveld refused to join the Kultuurkamer imposed by the German occupiers, the chair was never produced at the time. Thanks to the preservation of his original drawings, the armchair was finally realized 75 years later. The Armchair for Metz & Co not only highlights Rietveld's innovative design language, but also tells a remarkable story within Dutch design history.

Colours

Oak Natural Divina 3-224 - Remix 242

Oak Natural Terra Oxide 20362 - Remix 326

Canvas-Divina

Canvas-LEATHER A

Canvas-LEATHER B

Remix-Divina

Remix-LEATHER A

Remix-LEATHER B

Walnut Terra Jade 20368 - Remix 962

Armchair for Metz&Co / FRAME OAK NATUREL

Dimensions

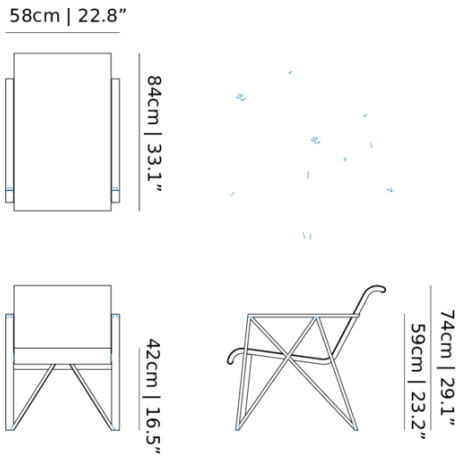

Product

WIDTH 58cm | 22.8''

HEIGHT 74cm | 29.1''

DEPTH 84cm | 33.1''

WEIGHT NETTO 15kg | 33.07lbs

Packaging

WIDTH 74cm | 29.1''

HEIGHT 90cm | 35.4''

CUBAGE 0.61m^3 | 21.64ft^3

LENGTH 92cm | 36.2''

WEIGHT 17kg | 37.48lbs

Technical

MATERIAL

solid oak or walnut frame, matt lacquered. Base in Canvas or Remix, Top in Divina or Leather

HEIGHT ARMREST

59cm | 23.2''

SEAT DEPTH

50cm | 19.7''

SEAT HEIGHT

42cm | 16.5''

SEAT WIDTH

49cm | 19.3''

Armchair for Metz&Co / FRAME WALNUT

Dimensions

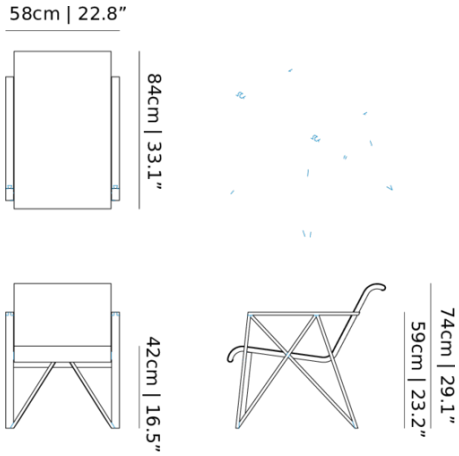

Product

WIDTH 58cm | 22.8"
HEIGHT 74cm | 29.1"
DEPTH 84cm | 33.1"
WEIGHT NETTO 15kg | 33.07lbs

Packaging

WIDTH 74cm | 29.1"
HEIGHT 90cm | 35.4"
CUBAGE 0.61m^3 | 21.64ft^3
LENGTH 92cm | 36.2"
WEIGHT 17kg | 37.48lbs

Technical

MATERIAL

solid oak or walnut frame, matt lacquered. Base in Canvas or Remix, Top in Divina or Leather

HEIGHT ARMREST

59cm | 23.2"

SEAT DEPTH

50cm | 19.7"

SEAT HEIGHT

42cm | 16.5"

SEAT WIDTH

49cm | 19.3"