PASTOE

Berlin Chair

GERRIT RIETVELD



The Berlin Chair embodies the core principles of Gerrit Rietveld as a leading figure of the De Stijl art movement. Its asymmetrical design, constructed from eight solid oak boards, is defined by clean lines and geometric planes. With its progressive form, the Berlin Chair is as striking as Rietveld's iconic Red and Blue Chair. Bold yet balanced, it captures attention without dominating a space. Its timeless color palette – designed by Vilmos Huszár – allows the chair to integrate seamlessly into both modern and vintage interiors.

Colours

Black & White

Berlin Chair / Arm Left

Dimensions

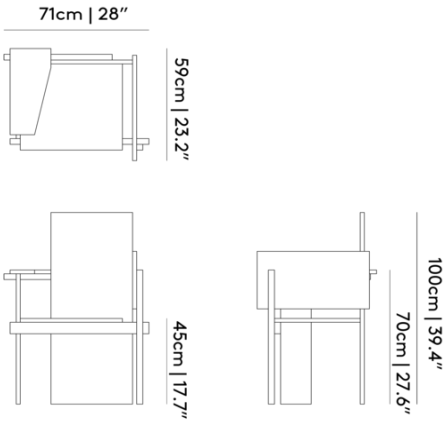

Product

WIDTH 71cm | 28"
HEIGHT 1000cm | 393.7"
DEPTH 59cm | 23.2"
WEIGHT NETTO 17kg | 37.48lbs

Packaging

WIDTH 74cm | 29.1"
HEIGHT 106cm | 41.7"
CUBAGE 0.59m^3 | 20.78ft^3
LENGTH 75cm | 29.5"
WEIGHT 21kg | 46.3lbs

Technical

MATERIAL
Solid oak lacquered

HEIGHT ARMREST
70cm | 27.6"

SEAT HEIGHT
45cm | 17.7"

SEAT DEPTH
45cm | 17.7"

SEAT WIDTH
40cm | 15.7"

Berlin Chair / Arm Right

Dimensions

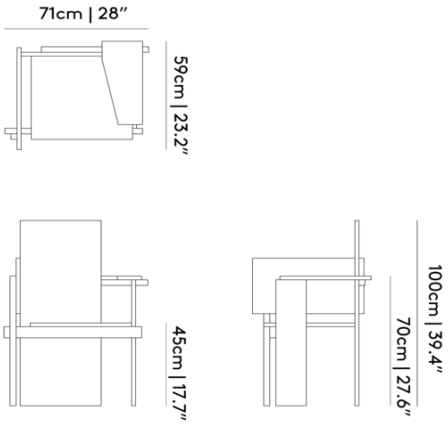

Product

WIDTH 71cm | 28"
HEIGHT 1000cm | 393.7"
DEPTH 59cm | 23.2"
WEIGHT NETTO 17kg | 37.48lbs

Packaging

WIDTH 74cm | 29.1"
HEIGHT 106cm | 41.7"
CUBAGE 0.59m^3 | 20.78ft^3
LENGTH 75cm | 29.5"
WEIGHT 21kg | 46.3lbs

Technical

MATERIAL

Solid oak lacquered

HEIGHT ARMREST

70cm | 27.6"

SEAT DEPTH

45cm | 17.7"

SEAT HEIGHT

45cm | 17.7"

SEAT WIDTH

40cm | 15.7"