PASTOE

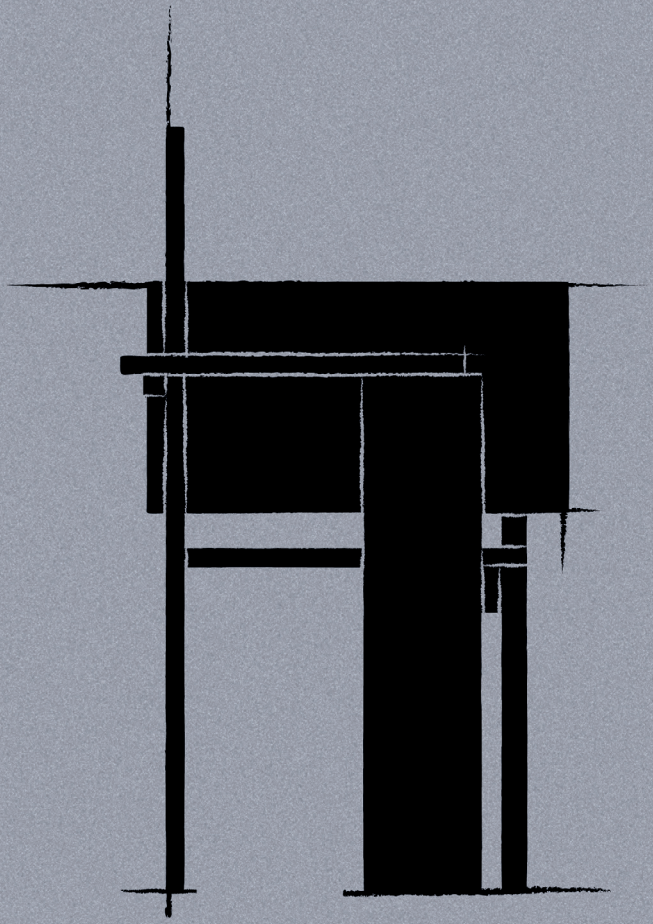

BERLIN CHAIR

Gerrit Rietveld, 1923

PRODUCT MANUAL

BERLIN CHAIR

Gerrit Rietveld, 1923

CLEANING

Vacuum the surrounding of the furniture or accessory regularly, ideally every week, where needed at half power. Wipe the product with a dry cloth or a fully wrung damp cloth. If you vacuum the product itself make sure to use a brush extension with soft hairs.

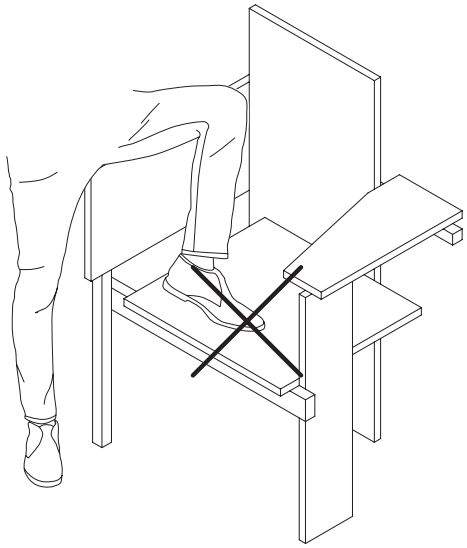

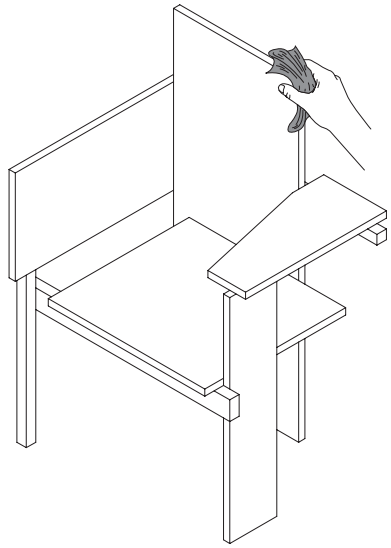

PASTOE

PASTOE