LIGHT·POINT.COM

EDGE ROUND

User Instructions

LIGHT·POINT
COPENHAGEN

General use

- The product is designed for indoor use only.
- The lamp gets hot after prolonged use, therefore, do not cover the product.

Cleaning instructions

- Before cleaning, ensure that the power supply is switched off.
- Wipe surface of lamp shade with a soft cloth.
- Do not use any abrasive cleaning tools such as steel wool, scouring sponges or stiff brushes.
- Never use strong cleaning agents such as white spirit, household glass cleaner or cellulose thinners.

Safety precautions

- The appliance should be installed, connected and tested by qualified electrician and in accordance with local regulations.
- Turn off the power supply before installation or maintenance of the lamp, and make sure that the cables are not squeezed or damaged by sharp edges during installation.
- The lamp should not be covered by insulation blankets or similar materials.

International warranty

Your product has gone through rigorous testing in order to live up to the highest quality standards. It therefore carries a 7-year warranty from the date of the original retail purchase receipt, covering defects in materials and workmanship when used normally in accordance with the published LIGHT-POINT guidelines.

These guidelines include but are not limited to information contained in technical specications, safety instructions and quick start guides. LIGHT-POINT is not responsible for damage arising from failure to follow instructions relating to the use of the product.

LIGHT-POINT is a registered trademark of NORDIC LIVING GROUP.

For more information, please visit
LIGHT-POINT.COM

LIGHT-POINT Smart Tune

powered by casambi

For more information about getting connected with your smartphone/tablet device, please visit;

https://en.light-point.com/shop/cms-light-point/smarttune.html

Please note: All the latest Casambi installation guides can be found at the above link or scan the QR code below.

1

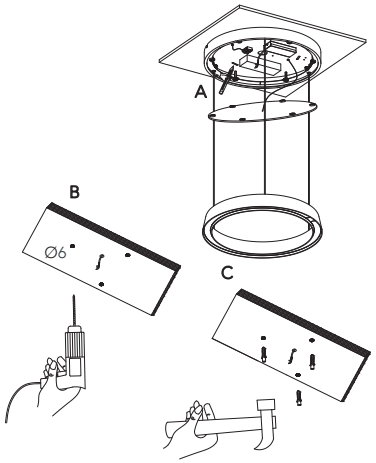

Installation instructions

NOTE: Please make sure the power supply is turned off before installing the lamp.

A: Hold the ceiling base to the desired location, and mark the drilling points for the screws.

B: Drill into the marked drilling points using a Ø6mm drill bit.

C: Fix the raw plugs so its flush against the surface.

2

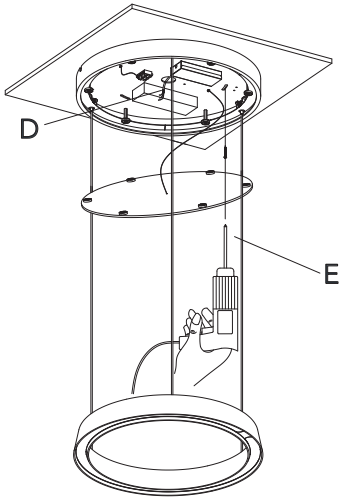

D: Place the ceiling base into the correct mounting position and pullout the mains power cable.

E: Screw the ceiling base securely into position.

3

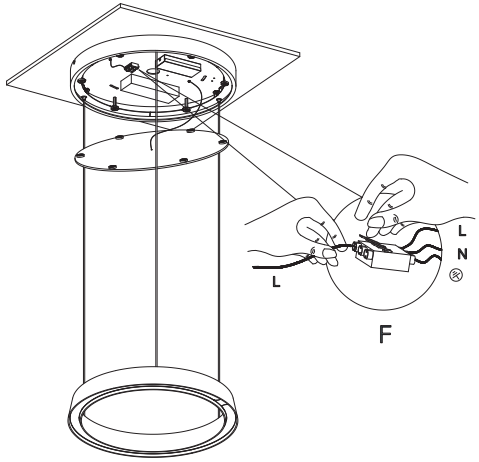

F: Connect the cables from both the lamp and the mains power into the terminal as illustrated above.

NOTE: The ceiling/lamp base can be used as installation box.

4

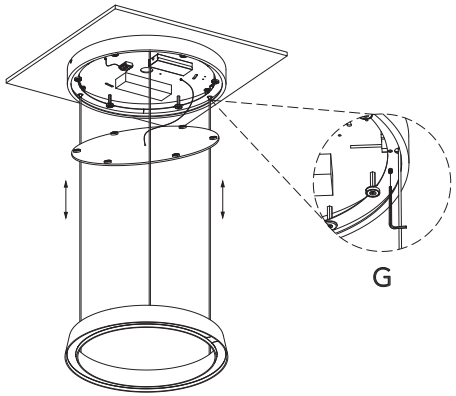

G: To adjust the cable height, push the metal cable adjuster and either pull or feed the cable to the desired length. Release the cable adjuster to secure the cable.

5

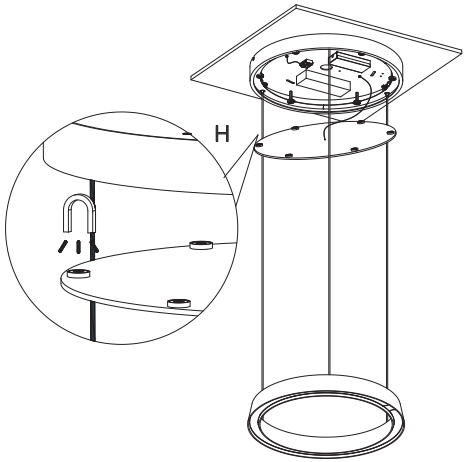

H: Mount the decorative ceiling base cover with the magnet fixing points illustrated.

6

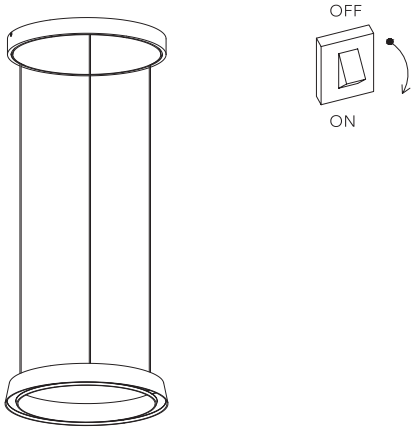

I Installation is complete

Dimmable with;

- Integrated LIGHT-POINT SMART TUNE Powered by Casambi
- External Casambi compatible switches
- Dimming function and changing CCT can only be done via casambi app after paring

**This product cannot be controlled by external trailing-edge dimmer*