1

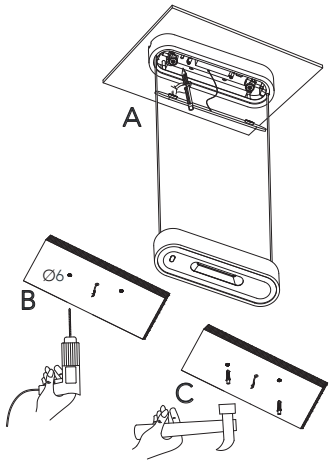

Installation instructions

NOTE: Please make sure the power supply is turned off before installing the lamp.

A: Hold the ceiling base to the desired location, and mark the drilling points for the screws.

B: Drill into the marked drilling points using a Ø6mm drill bit.

C: Fix the raw plugs so its flush against the surface.

2

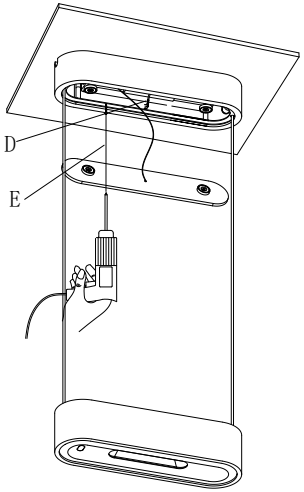

D: Place the ceiling base into the correct mounting position and pullout the mains power cable.

E: Screw the ceiling base securely into position.

3

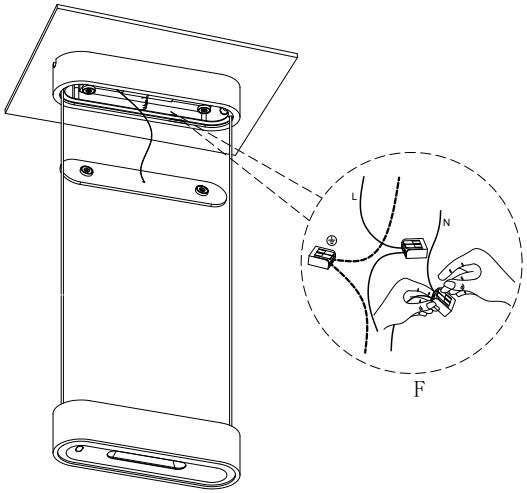

F: Connect the cables from both the lamp and the mains power into the terminal as illustrated above.

NOTE: The ceiling/lamp base can be used as installation box.

4

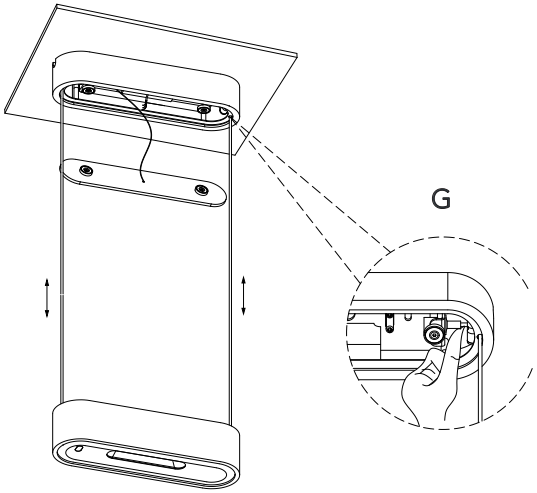

G: To adjust the cable height, push the metal cable adjuster and either pull or feed the cable to the desired length. Release the cable adjuster to secure the cable.

5

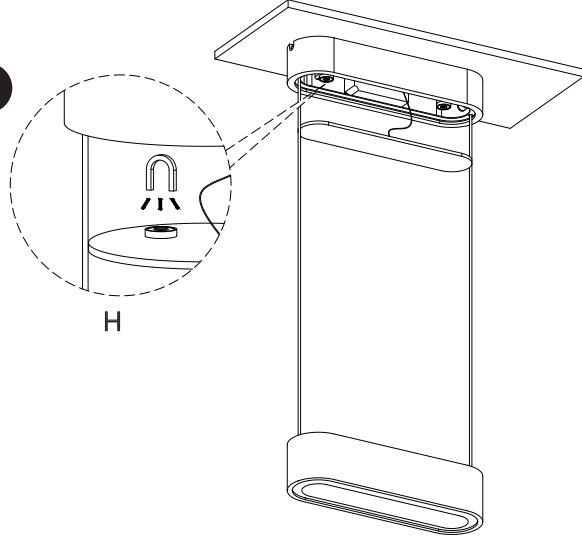

H: Mount the decorative ceiling base cover with the magnet fixing points illustrated.

6

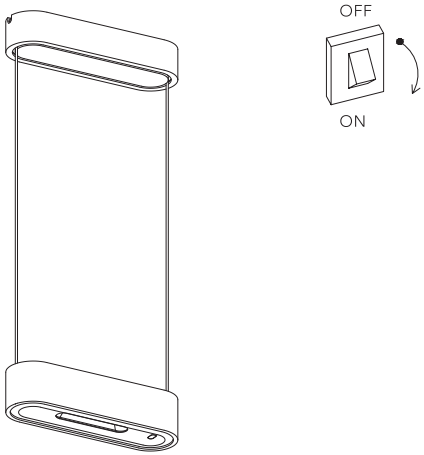

I: Installation is complete

Dimmable with;

- Integrated LIGHT-POINT SMART TUNE Powered by Casambi
- Integrated Touchless sensor
- External Casambi compatible switches Installation instructions

**This product cannot be controlled by external trailing-edge dimmer*

LIGHT-POINT.COM

AURA

User Instructions

LIGHT·POINT
COPENHAGEN

General use

- The product is designed for indoor use only.
- The lamp gets hot after prolonged use, therefore, do not cover the product.

Cleaning instructions

- Before cleaning, ensure that the power supply is switched off.
- Wipe surface of lamp shade with a soft cloth.
- Do not use any abrasive cleaning tools such as steel wool, scouring sponges or stiff brushes.
- Never use strong cleaning agents such as white spirit, household glass cleaner or cellulose thinners.

Safety precautions

- The appliance should be installed, connected and tested by qualified electrician and in accordance with local regulations.
- Turn off the power supply before installation or maintenance of the lamp, and make sure that the cables are not squeezed or damaged by sharp edges during installation.
- The lamp should not be covered by insulation blankets or similar materials.

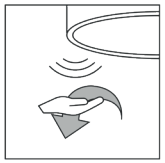

ON / OFF
hold your hand still under the sensor
for 2 - 3 secconds

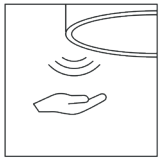

DIMM
hold your hand still under the sensor to adjust the light level

**This product cannot be controlled by external trailing-edge dimmer*

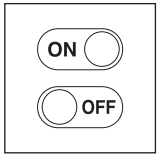

ENABLE/DISABLE THE SENSOR
you can enable/disable the sensor by using the Casambi app

International warranty

Your product has gone through rigorous testing in order to live up to the highest quality standards. It therefore carries a 7-year warranty from the date of the original retail purchase receipt, covering defects in materials and workmanship when used normally in accordance with the published LIGHT-POINT guidelines.

These guidelines include but are not limited to information contained in technical specications, safety instructions and quick start guides. LIGHT-POINT is not responsible for damage arising from failure to follow instructions relating to the use of the product.

LIGHT-POINT is a registered trademark of NORDIC LIVING GROUP.

For more information, please visit
LIGHT-POINT.COM

LIGHT-POINT Smart Tune

powered by casambi

For more information about getting connected with your smartphone/tablet device, please visit;

https://en.light-point.com/shop/cms-light-point/smarttune.html

Please note: All the latest Casambi installation guides can be found at the above link or scan the QR code below.