RONDE // PENDANT Ø40, EU MODEL

RONDE COLLECTION

Designed by Oliver Schick

PRODUCT

Item no.: 006-021
+ style code:
- 00: Pigeon Grey
- 01: Charcoal Black
- 02: Anthracite Grey
- 03: Rusty Red
- 05: Matt White

COLORS

// Pigeon Grey

// Charcoal Black

// Anthracite Grey

// Rusty Red

// Matt White

DESCRIPTION

The Ronde Pendant designed by Oliver Schick is made of spun aluminium with aluminium light fittings. The outer surface is powercoated in 5 different colors: Pigeon Grey, Charcoal Black, Anthracite, Rusty Red and Matt White. The inside is always powercoated laquered in white. The fabric wire and the canopy is alway black except for the matt white, where both fabric wire and canopy is white. The pendant comes in 2 sizes Ø200 mm and Ø400 mm

VERSION - RONDE PENDANT

'- Fabric wire and canopy - black:
- Pigeon Grey / White inside // RAL xxxx / RAL 9003 // Gloss level 20 / Gloss level 20
- Charcoal Black / White inside // RAL xxxx / RAL 9003 // Gloss level 20 / Gloss level 20
- Rusty Red / White inside // RAL xxxx / RAL 9003 // Gloss level 20 / Gloss level 20
- Anthracite Grey / White inside // RAL 9016 / RAL 9003 // Gloss level 20 / Gloss level 20

- Fabric wire and canopy - white:
- Matt White / White inside // RAL 9003 / RAL 9003 // Gloss level 20 / Gloss level 20

VERSION - RONDE PENDANT

Order item - look for part number in the pricelist.

Series contains the following:

RONDE PENDANT Ø20
RONDE PENDANT Ø40

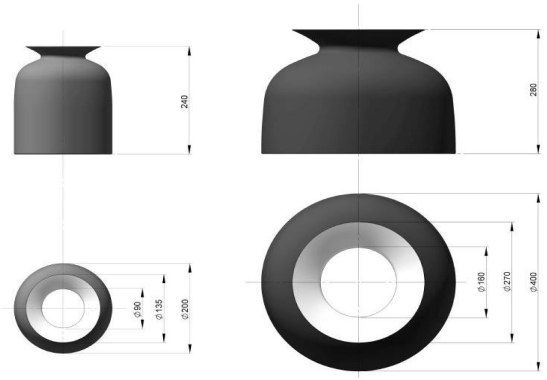

FACTS

MEASUREMENT - *L x W x H mm*
Lamp height: 280 mm
Lamp bottom diameter: Ø400 mm
Lamp top diameter: Ø270 mm
Lamp middle diameter: Ø160 mm
Cable length, exposed: APP. 5000 mm

WEIGHT ITEM - *LAMP INCL. WIRE*
1272 g

PACKAGING TYPE
Cardboard box

PACKAGING MEASUREMENT - *L x W x H cm*
L: 46,5 x W: 46,5 x H: 46,5 cm

WEIGHT PACKAGING - *MATERIAL TYPE (recycleable)*
- Delivery note: 6 g
- PS foam: 234 g
- PE polybag: 38 g
- Cardboard outside: 1620 g

WEIGHT PACKAGING - *TOTAL*
3170 g

NUMPER OF PARCELS
1 pcs.

RONDE // PENDANT Ø40, EU MODEL

RONDE COLLECTION

Designed by Oliver Schick

ACCESSORIES

-

ENVIRONMENT

-

TESTS

-

CERTIFICATION AND LABELS

CE-CERTIFIED

SAFETY INSTRUCTIONS

If the cord or plug is damaged, unplug it from the socket with dry hands. Do not use the lamp until it is repaired by a qualified Electrician.

Bulb requirements*:
- Socket: E27 base
- Recommended light source - All fluorescens light bulbs:
  Recommended wattage: 15 W
  Max. wattage: 20 W
- Recommended light source - Halogen light bulbs:
  - Recommended wattage: 42 W
  - Max. wattage: 70 W

**Lightbulb not included*

**Euro voltage: 230 V*
**Freqvency: 50 Hz*
**Supply voltage: AC power ~*
**Normally Closed: IP20*

Class II / Double insulated

CE-Mark

Luminaires accepted for mounting on a flammable base